Camshelving® High Density Top Rail Storage System

CAUTION! PLEASE READ PRIOR TO ASSEMBLY

Elements® XTRA Series



IMPORTANT!
- Length side of the system must be installed a minimum of 5" (12,7 cm) from the wall.
- 30" (76,2 cm) minimum open aisle space is recommended.

THIS IS NOT A TOY!

CAUTION!
LIFTING AND INSTALLING RAILS
- Minimum 2 person lift required to place rails over Stationary and Mobile Units.

WARNING!
TIPPING HAZARD
- Do not stand or climb on the shelving.
- Place heavier items on lower shelves.
- Weight must be evenly distributed across each shelf.
- Do not drop heavy objects on shelves.

Click or Scan for Other Languages

CAUTION!
MAXIMUM WEIGHT BEARING CAPACITY
IMPORTANT - Each Stationary and Mobile Unit must have a MINIMUM of four (4) shelves.

Elements XTRA Top Rail Stationary Units, up to 60" (152,4 cm) in length
- 2400 lbs (1088,6 kg) per unit.
- 800 lbs (362,8 kg) per shelf.

Elements XTRA Top Rail Mobile Units
- 900 lbs (408 kg) per unit (based on weight bearing of casters).

HARDWARE SPECIFICATIONS - TYPE 304 STAINLESS STEEL



1/4" x 0.75" Stainless Steel Bolt and 1/4" Lock Washer for Rail Joiner



1/2" -13 x 3.5" Stainless Steel 18-8 Bolt for End Rail Top



1/2" -13 x 4.5" Stainless Steel 18-8 Bolt for Roller



10-32 x 1/2" Pan Head Screw

TOOLS



Weighted rubber mallet



Power tool with socket set



Phillips head screwdriver #2

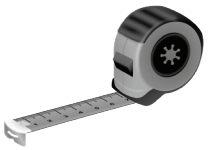

Measuring tape



Wrench

Assembly Guide

CAMBRO®

www.cambro.com

Assembly Videos:

Stationary Unit 

Mobile Unit 

Top Rail 

FULL SYSTEM ASSEMBLY

IMPORTANT!

- Install Stationary Units on a flat, level surface.
- Assemble 2 complete top rail lengths, joining middle and end rails before placing onto Stationary and Mobile Units.
- ALWAYS hand-thread rail joiner bolts into joiners set inside rails to start.
- Minimum 2 person lift required for rail placement over Stationary and Mobile Units.
- BEFORE securing Floor Fasteners, ensure the system is squared and aligned end to end so that Stationary Units (measure inside of each Post Frame, side to side) and Top Rails (measure the distance between rails, in the middle and at each end) are evenly spaced.

Step by Step Guide

1. Assemble Stationary Top Rail Units.
2. Assemble Mobile Top Rail Units.
3. Place Stationary units and Mobile Units within designated storage space.
4. Assemble Middle Rails and End Rails together.
- Place rails upside down on protected surface to minimize risk of scratching.
- Insert Rail Joiners, 2 per rail end.
- Line up drilled holes in rails with Rev Nuts in Joiners.
- Hand thread small bolts with Lock Washers to start into each hole.
- Finish installing bolts using tool with 7/16" wrench.

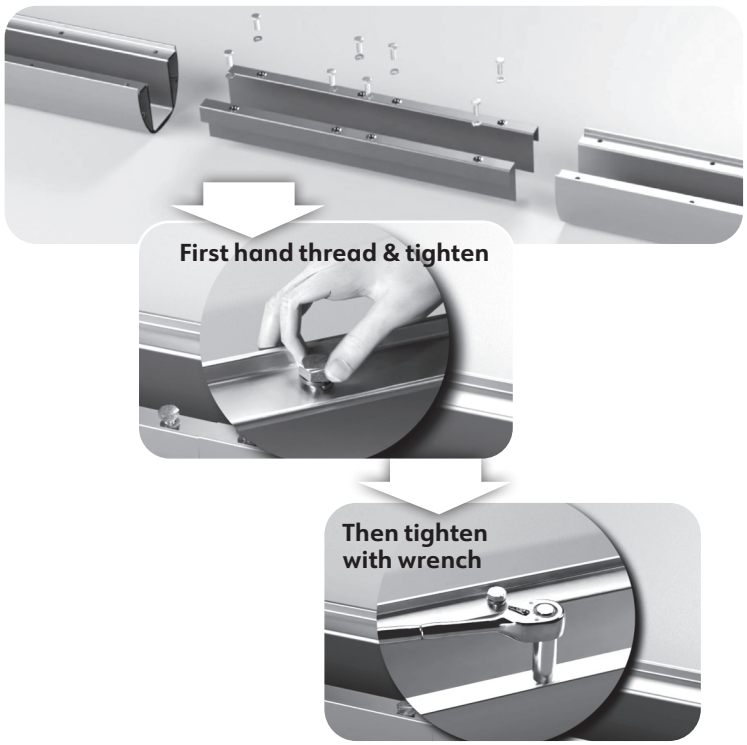

5. Flip rails over. Place and hold one rail length over Stationary Units and Rollers on Mobile Units.

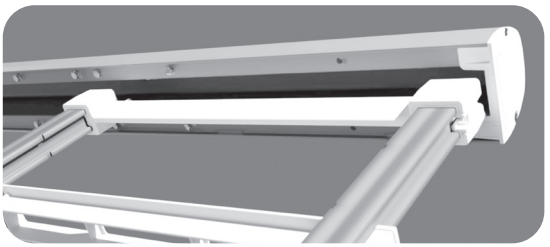

6. Line up threaded inserts on the Stationary Posts with bolt holes on each End Rail.
7. Ensure Mobile Unit Rollers are inside each channel and move back and forth smoothly.

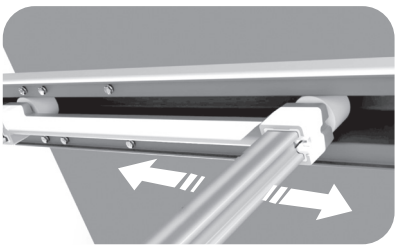

8. Place second rail length on the other side.
9. Ensure system is squared and aligned end to end. Stationary Units (measure inside of each).
10. Thread top bolts into tops of End Rails.

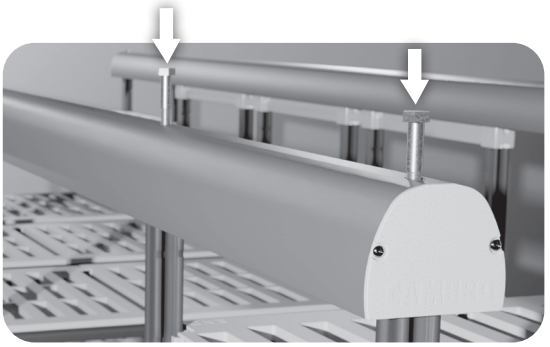

11. Finish installing bolts with 3/4" wrench.

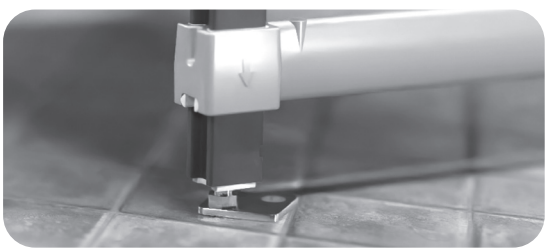

12. Secure Floor Fasteners to floor (Bolts not included).

RAIL KITS



End Rail Kit

Available lengths:

18" (45,7 cm)
21" (53,3 cm)
24" (61 cm)

Each Stationary Unit requires 1 End Rail Kit:

- 2 each End Rails
- 2 each plastic End Plate Covers (factory-installed on rails)
- 4 each 10-32 x 1/2" Pan Head Screw
- 4 each Rail Joiners with embedded Rev Nuts
  - 8 each 1/4" x 0.75 Stainless Steel Bolt and 1/4" Lock Washer

---



Middle Rail

Available lengths:

4.5' (137,1 cm)
5' (152,4 cm)
6' (182,9 cm)

- 1 Rail per box

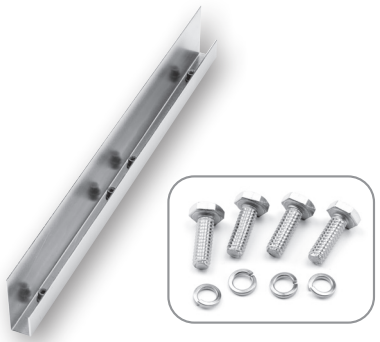

Rail Joiner Kit

Use 1 each kit to join 2 sets of rails together

- 4 each Rail Joiners with embedded Rev Nuts
- 32 each 1/4" x 0.75 Stainless Steel Bolts and 1/4" Lock Washers for Rail Joiner

STATIONARY UNIT

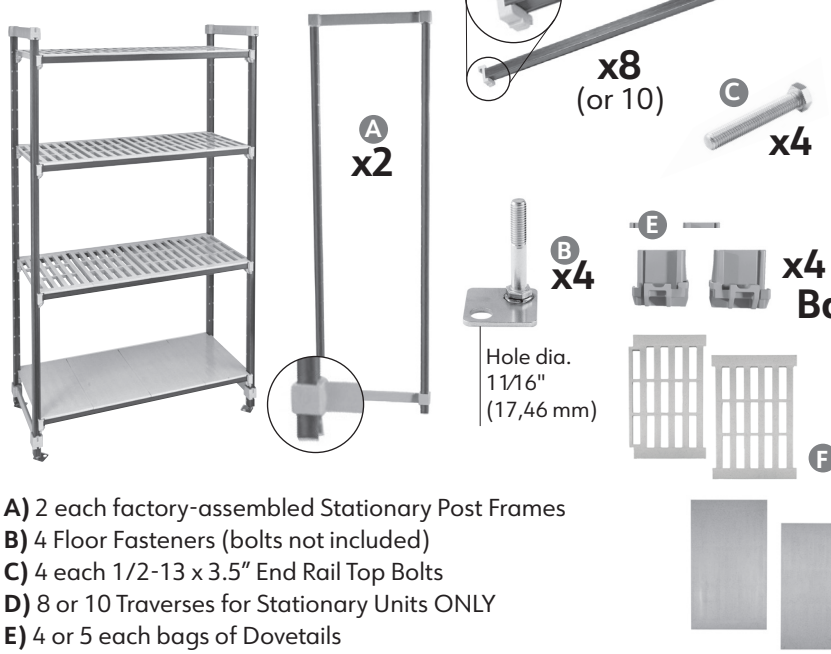

A) 2 each factory-assembled Stationary Post Frames
B) 4 Floor Fasteners (bolts not included)
C) 4 each 1/2-13 x 3.5" End Rail Top Bolts
D) 8 or 10 Traverses for Stationary Units ONLY
E) 4 or 5 each bags of Dovetails
F) Required Shelf Plates based on shelf lengths - vented or solid

MOBILE UNIT

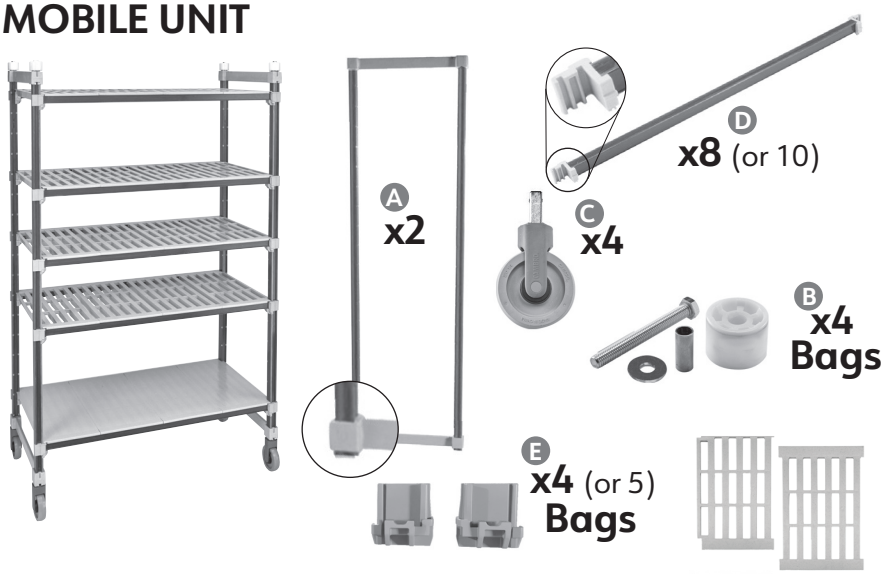

A) 2 each factory-assembled Mobile Post Frames
B) 4 each bags Top Roller sets
C) 4 each low-friction, High-Density Casters
D) 8 to 10 Mobile Traverses for Mobile Units ONLY
E) 4 or 5 each bags of Dovetails
F) Required Shelf Plates based on shelf lengths - vented or solid

MOBILE UNIT TOP ROLLER SET



4 each bags of Roller sets included in each Top Rail Mobile Unit

- 1 each plastic Top Roller
- 1 each Metal Insert Sleeve
- 1 each Flat Washer
- 1 each 1/2"-13 x 4.5" large Bolt

MAINTENANCE
Perform periodically to ensure optimal performance:

- Check alignment of overall system. Ensure rails and Stationary Units are properly aligned, with rails equally parallel to each other. Measure between the inside of the Stationary Post Frames, side to side, to ensure they are equally spaced, squared up.
- Ensure shelf Traverses are fully engaged on Dovetails.
- Check casters for wear and tear and replace if needed.
- Inspect and replace Mobile Unit Top Rollers as needed to ensure they are rolling smoothly and unobstructed within the rail channels.
- This product is intended for indoor use, and load should be evenly distributed across surface.
- Clean with hot water, mild detergent and soft cloth or sponge.
- Use cleaners and degreasers designated for plastic materials. Do not use cleaners or detergents containing ammonia or bleach.
- Do NOT use steel wool, abrasive scrub pads or brushes. Allow to air dry or use clean cloth to wipe dry.

NSF
COMPONENT
(on shelving units only)

Product Info
productinfo@cambro.com

CAMBRO

Customer Service 800 833 3003
© Cambro Manufacturing Company, Huntington Beach, California 92647
Printed in USA 09/25

UMHDTR
REV A

www.cambro.com

D062511